Technical Specification Sheet

PADLOCK EYE & ACCESSORIES STRAIGHT BEND POWDER COATED



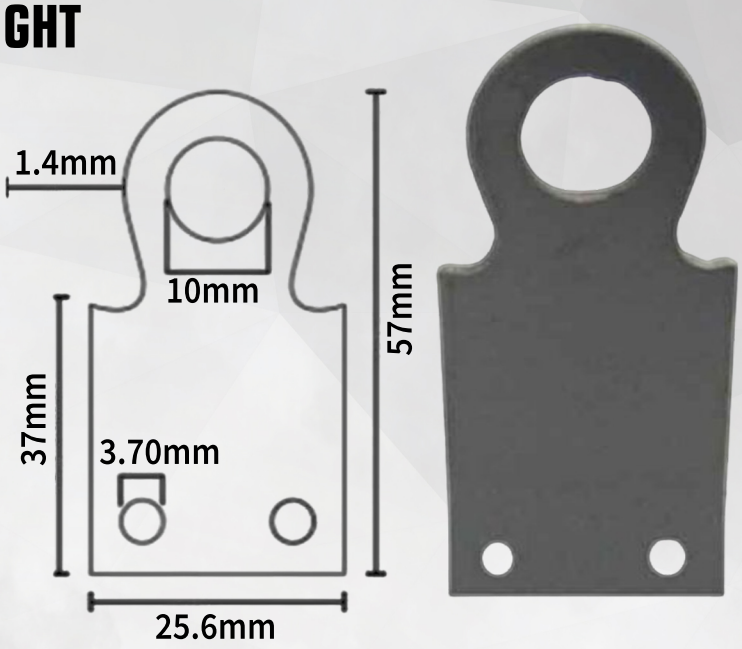

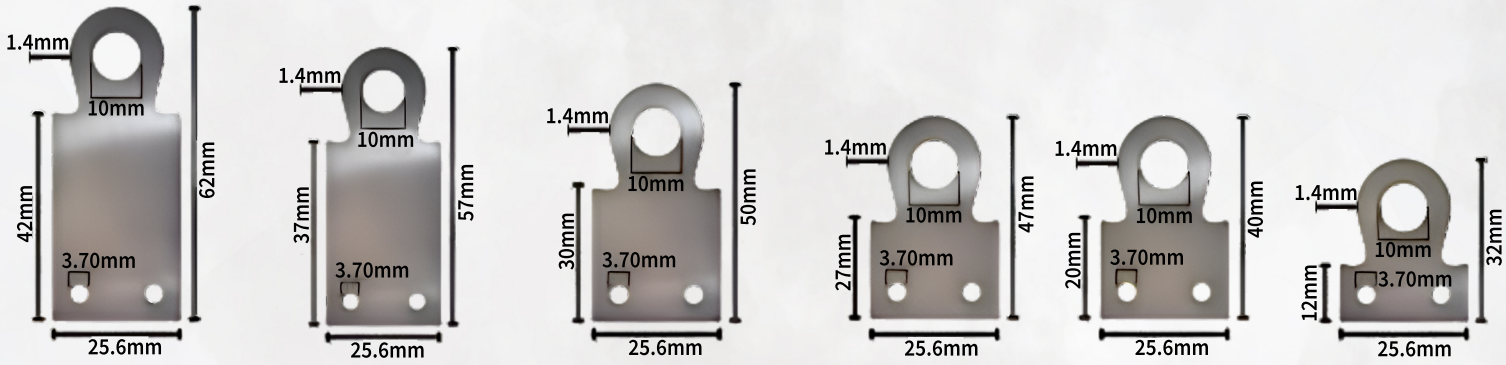

ITEM CODE	TYPE	LENGTH	WIDTH	MAX, SHACKLE DIA	NUT SCREW HOLE DIA	THICKNESS	WEIGHT
LS-LC48	SMALL	32MM	25.6MM	10MM	3.70MM	1.4MM	45GM
LS-LCSO	MEDIUM	40MM	25.6MM	10MM	3.70MM	1.4MM	70GM
LS-LC52	BIG	47MM	25.6MM	10MM	3.70MM	1.4MM	80GM
LS-LC54	LARGE	57MM	25.6MM	10MM	3.70MM	1.4MM	110GM
LS-LC56	JUMBO	62MM	25.6MM	10MM	3.70MM	1.4MM	120GM

THADHANI®
The Experts in Safety... Since 1947

J.THADHANI & CO.
New #12/ Old #28, Stringers Street,
Chennai - 600001, Tamilnadu, India.

044 - 4262 5223
info@thadhanisafety.com
www.thadhanisafety.com