Technical Specification Sheet

SCAFFOLD HOLDER

LOTO HOLDER - Plastic/Polypropylene
LS-T75 Scaffolding tag holder with specific
*DO NOT USE" message + having provision of tag insertion



- **Size:** Length 329mm, width 100mm, thickness Upper thin part 2.28mm, lower tag insertion part 6.3mm, Circular cut diameter 64.3mm
- **Material:** Polyester Or Plastic
- **Weight:** 6.5gm
- **Thickness:** 0.4mm (±10%)
- **Size:** length 329mm X 100mm, Diameter of top 64.3mm
- **Application:** It can be tied up with simple/numbered cable ties or directly tuck the padlock shackle inside the punched eye lid, and then write message with the normal/rewritable permanent marker pen.
- **Advantage:**

a. Weather and tear proof, oil resistant.
b. Rewriteable and reusable.
c. Main utilization of Tagout system is to communicate safety and lockout information like Danger, Caution and Do not attempt to operate Or Out of service any switch, valve, or other energy isolating device bearing a padlock.
d. Customize tags hence we can make the design/application specific display an application specific messages in the preferred language like English, Hindi etc.

LS - T75

Intallation

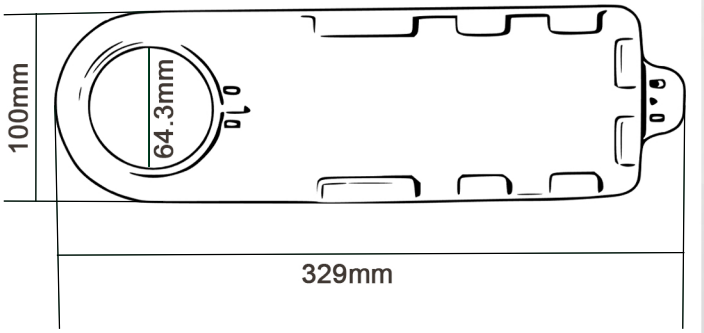



Single/dual/Numerous color combination
Content/Size can be modify as per requirement

WE CAN MAKE CUSTOMIZED TAGS AND HOLDERS ALSO AS YOUR CHOICE.....

THADHANI®
The Experts in Safety... Since 1947

J.THADHANI & CO.
New #12/ Old #28, Stringers Street,
Chennai - 600001, Tamilnadu, India.

044 - 4262 5223
info@thadhanisafety.com
www.thadhanisafety.com