Technical Specification Sheet

PLUG POWER LOCKOUT



Directly inserted in power source, this lockout device can effectively insulate electric power energy and prevent accidental operation during maintenance.

Can put a padlock or hasp to ensure the lockout of power source.

Size-height: 118mm **Width:** 45mm

Base dia: 52mm

Its installation needs no tools.

The eye-catching bright red alerts the people who intend to restore the energy.

Two labels are provided on both sides of the lock to warn that the power plug is locked out and cannot be removed or record the information on the person who is performing the lock-out procedure.

LS-PL87

Intallation

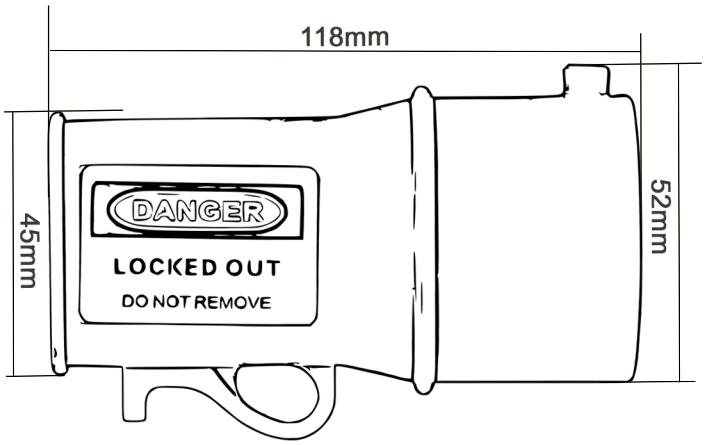



ITEM CODE	DESCRIPTION
LS-PL85	SMALL SUITABLE FOR 16A, 110/240V POWER SOURCE
LS-PL86	MEDIUM SUITABLE FOR 32A, 415V 3-PHASE+EARTHING
LS-PL87	LARGE SUITABLE FOR 415V 3-PHASE+ZERO LINE+EARTHING

THADHANI®
The Experts in Safety... Since 1947

J.THADHANI & CO.
New #12/ Old #28, Stringers Street,
Chennai - 600001, Tamilnadu, India.

044 - 4262 5223
info@thadhanisafety.com
www.thadhanisafety.com