Technical Specification Sheet

PADLOCK ACCESSORIES

BUFFER for padlock eye

Width 25mm, nut / screw hole dia. 4mm, thickness 1.2mm.y

Metal Sheet FullY powder coated.



LS-LC58

Intallation

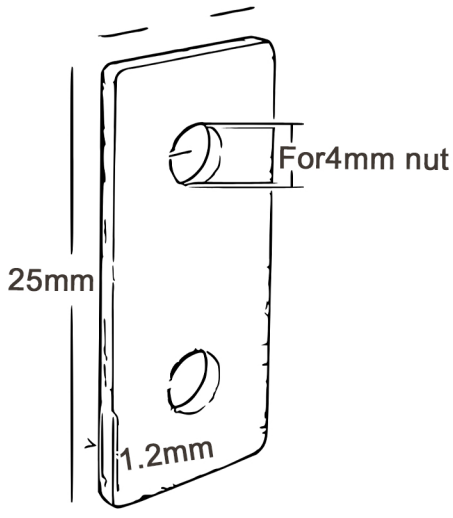

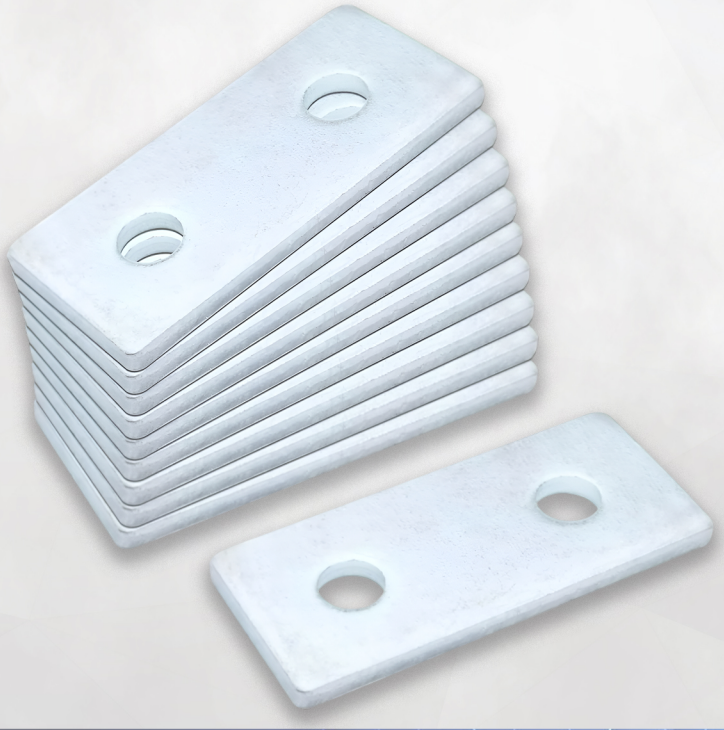

ITEM CODE	DESCRIPTION	WEIGHT
LS-LC58	BUFFER for padlock eye: Width 25mm, mut/screw hole dia.4mm, thickness 1.2mm-Set of 10	50GM

THADHANI®
The Experts in Safety... Since 1947

J.THADHANI & CO.
New #12/ Old #28, Stringers Street,
Chennai - 600001, Tamilnadu, India.

044 - 4262 5223
info@thadhanisafety.com
www.thadhanisafety.com