Technical Specification Sheet

OSHA SAFETY PADLOCKS (NYLON SHACKLE)





Durable, lightweight and insulated material lock body
Nylon Shackle height 76mm, diometer 6mm, nylon shadde plastic synthesized material lock body
All ports are explosion-proof, antimagnetic, non-conductive plastic, copper
Durable lock body, easy to be carried, none silicon, UV resistance and corrosion resistance: Made of copper alloy material lock cylinder, con effectively eliminate
the mettol friction sports Nylon shockle: not only completely insulated, but also greatly increase the hardness of the lock shodde;
Specially design of the double slot key to meet the requirements of multi-level monogement,
"Customized lobels, con provide content/logo/serial numbers/authorized personnel image/along with their name/and contact details with respect to the quantity required.
Also KEYS co be customized, with serial number engraved in it For customization in odvorce communicate with sales team
DIFFERENT KEY (KO), ALUKE KEY (KA), MASTER KEY (MOD with 2 individually keyed

LS - LC48

Intallation

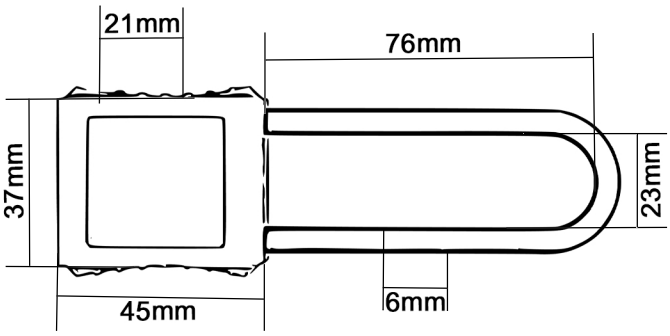



PROUCT NAME	BODY HEIGHT	BODY WIDTH	BODY DEPTH	SHACKLE HEIGHT	SHACKLE WIDTH	SHACKLE THICKNESS
REGULAR SHACKLE	45MM	37MM	21MM	76MM	23MM	6MM

THADHANI®
The Experts in Safety... Since 1947

J.THADHANI & CO.
New #12/ Old #28, Stringers Street,
Chennai - 600001, Tamilnadu, India.

044 - 4262 5223
info@thadhanisafety.com
www.thadhanisafety.com