Technical Specification Sheet

REGULAR SHACKLE JACKETED PADLOCK

Durable, Lightweight and insulated material lock body
Nylon Shackle : height 76mm, diameter 6mm, nylon shackle plastic synthesized material lock body
All parts are explosion-proof, anti-magnetic, non-conductive – plastic, copper or brass
Durable lock body, easy to be carried, none silicon, UV resistance and corrosion resistance, made of copper alloy material lock cylinder, can effectively eliminate the metal friction sparks;
Nylon shackle: not only completely insulated, but also greatly increase the hardness of the lock shackle;
Specially design of the double slot key to meet the requirements of multi-level management,
"Customized labels can be provided content / Logo / Serial numbers / authorized personnel images / along with their name / and contact details with respect to the quantity required.
Also KEYS can be customized with a serial number engraved in it.
for communication in advance communicate with sales team.
DIFFERENT KEY (KD), ALIKE KEY (KA), MASTER KEY (MK), with 2 individually keyed



LS - LC46

Intallation

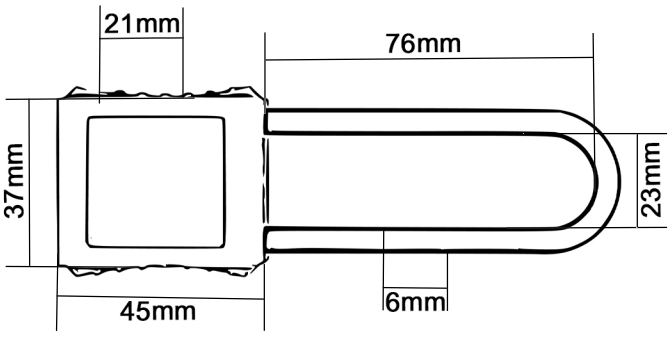



PROUCT NAME	BODY HEIGHT	BODY WIDTH	BODY DEPTH	SHACKLE HEIGHT	SHACKLE WIDTH	SHACKLE THICKNESS
REGULAR SHACKLE	45MM	37MM	21MM	76MM	23MM	6MM

THADHANI®
The Experts in Safety... Since 1947

J.THADHANI & CO.
New #12/ Old #28, Stringers Street,
Chennai - 600001, Tamilnadu, India.

044 - 4262 5223
info@thadhanisafety.com
www.thadhanisafety.com