Technical Specification Sheet

ELECTRICAL PANEL LOCKOUT (ROUND)

Material: Polycarbonate
Locking holes: 2 numbers to provide group isolation
Size:
Cover Outer base 96X96mm
Cover inner dia 80mm
uppor body dia 85mm
Depth-68mm
Accepts shackle maximum up to 7mm

Electrical panel lockout device is used to lockout electrical panel buttons and switches where there is no inbuilt lockout provision is provided, push button and rotary switch covers, which is secured with a padlock or hasp and this cover prohibits access to a switch or control on the electrical panel. Body made in two parts of transparent bases and cover that allow visibility
of nameplates and labels. This transparent Cover for Panel Switches completely seals the Switch and allows the user to see what position the switch is locked on.

LS-EP53,54

Intallation

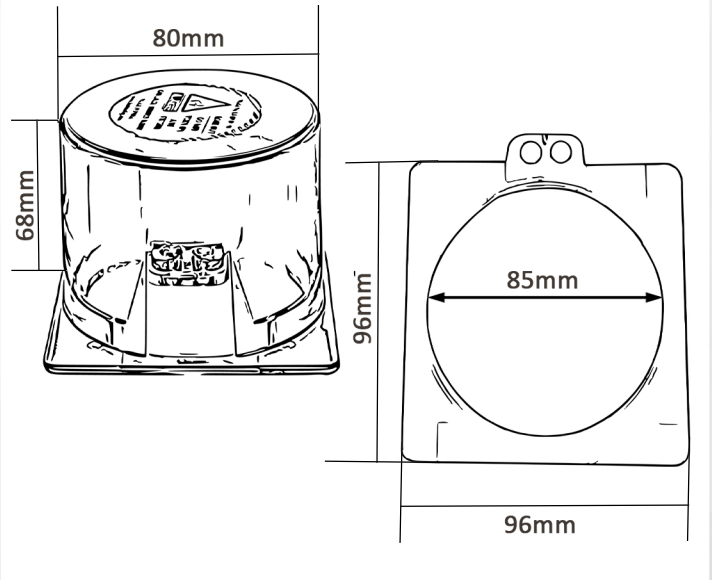

ITEM CODE	DESCRIPTION	WEIGHT
LS-EP53	ROUND BODY	88.5GM
LS-EP54	ROUND BODY CONNECTED WITH CHAIN	91.5GM
LS-EP55	ROUND BODY WITH 45° CUT	84.5GM
LS-EP56	ROUND BODY WITH 90° CUT	84.5GM

THADHANI®
The Experts in Safety... Since 1947

J.THADHANI & CO.
New #12/ Old #28, Stringers Street,
Chennai - 600001, Tamilnadu, India.

044 - 4262 5223
info@thadhanisafety.com
www.thadhanisafety.com